General specifications	
Spa weight (dry)	195 kg
Spa weight (filled)	715 kg

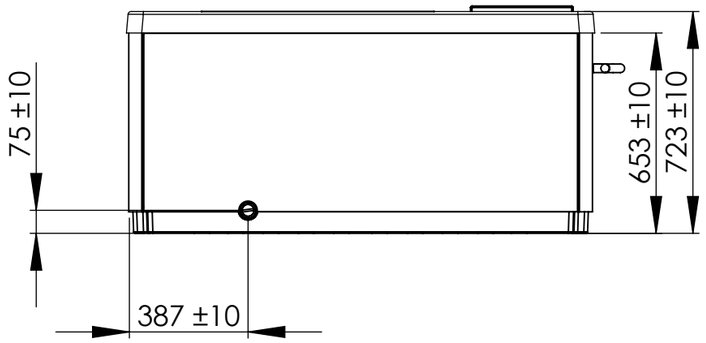

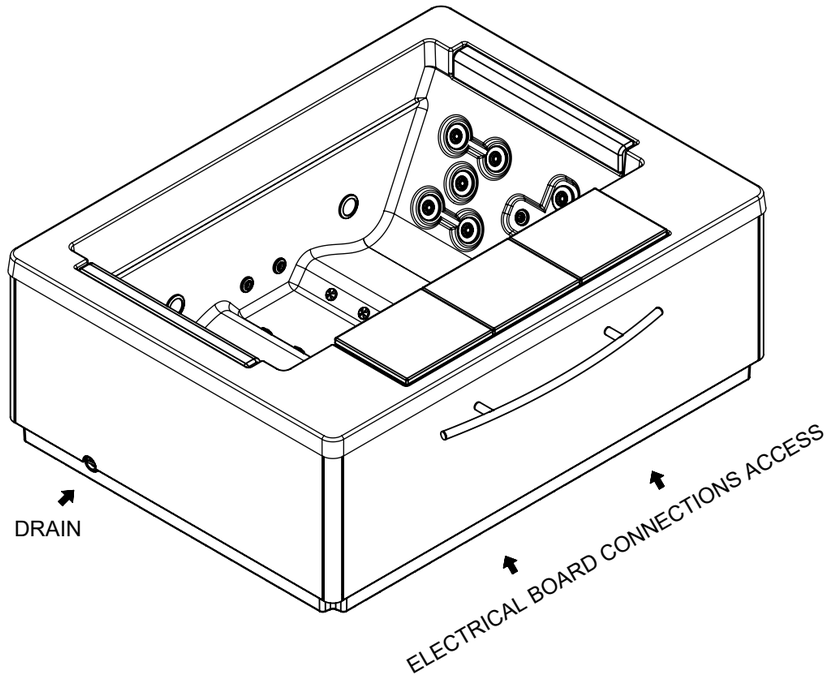

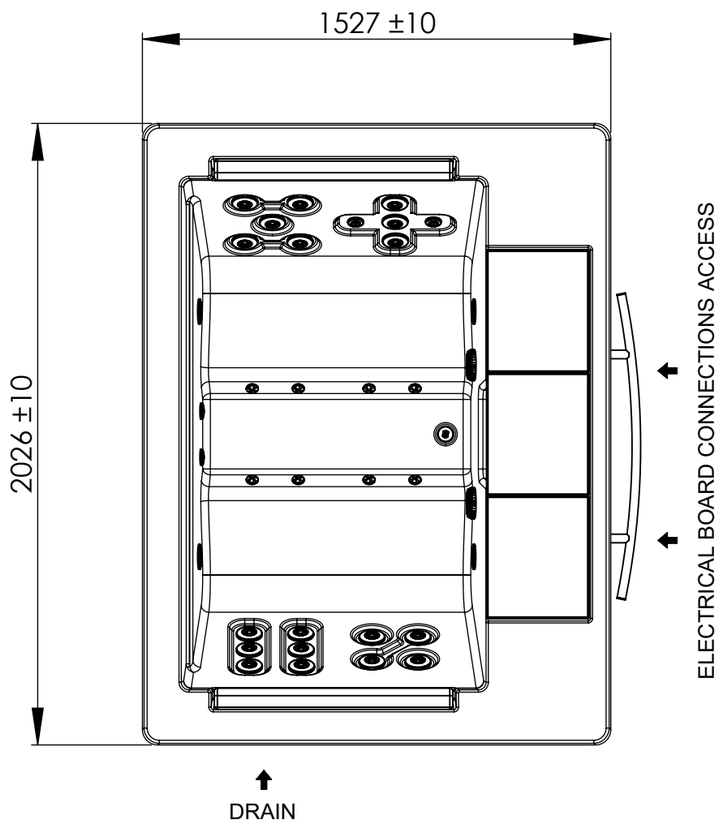

WARNING:
It's essential to keep a minimum clearance access of **700mm** all around.

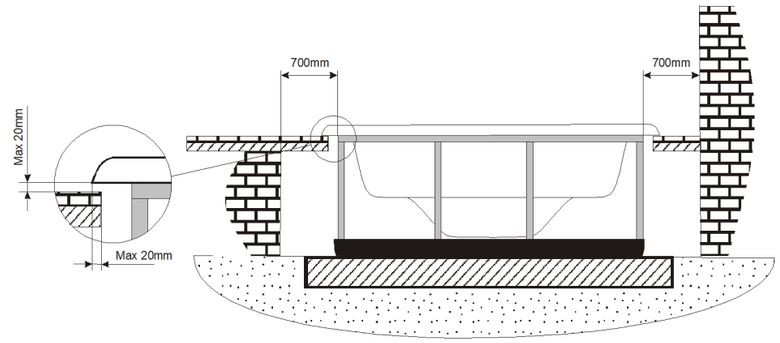

According to our policy of continuous improvement, dimensions, features or components of this product can be partially or completely changedwithout prior notice.
It's Customer responsibility to verify that this is the last version of the drawing

Change No.	Date	Name	Modification
01	14/10/2019	ERDS(OF)	Update drawing due to changes in spa

Remarks
Dimensions in mm. General Tolerances +/- 10mm

COMMERCIAL

Drawn	14/10/2019	ERDS(OF)
Checked	14/10/2019	V.Saiz
Scale 1:20	General Tolerance DIN 7168 ISO 2768g	
Sheet 1/2		

IBERSPA

71768

Rev. 01

First Angle Projection

Property of IBERSPA S.L. Avda. Plà d'Urgell 2-8 25200 Cervera, Spain. Don't use without permission. Keep this information confidential and use it solely for the permitted purpose.